Future High Energy Accelerators

There are two types of high energy accelerators which are distinctly different in many respects. They are,

1. Hadron Colliders (circular accelerators)
   $p\bar{p}$, pp, heavy ion, pe etc.

2. Linear colliders
   e^+e^-
   muon colliders - combination of these because they use both technologies

For the "Future" both of these machines are being considered.

Hadron colliders:-

Hadron colliders are "Discovery Machines" for high energy physics. ν_μ, ν_τ, charm quark, bottom quark, top quark, $W^\pm$, Z, etc.

Future machines:- LHC, VLHC/RLHC ...

Linear colliders:-

These are "precision measurement machine". These are also discovery machines in HEP e.g. nucleon structure, τ-lepton etc

Future Machines:- NLC, Tesla, ...

Energy loss due to synchrotron radiation

$$\Delta E = \gamma^4 m_p c^2 \frac{4\pi r_p}{3\rho}$$

where γ = relativistic γ.

$m_p c^2$ = 0.938279 GeV

r_p = classical radius of proton

$= e^2/4\pi\varepsilon_0 m_p = 1.533 \times 10^{-18}$ m

ρ = Bending radius of the dipole

$= \frac{E}{eBc}$

Total power in synchrotron radiation per ring:

$$P_s = \frac{2ec^2\gamma^4 I}{3\varepsilon_0 g C}$$

$I = \frac{ecN_T}{C}$ – beam current

$N_T = C\frac{N_B}{S_B}$ – Total number of protons

S_B ← (bunch spacing)

$g = \frac{2\pi\rho}{C}$ filling factor

LHC Conceptual Design Rept (1995)

LHC 1

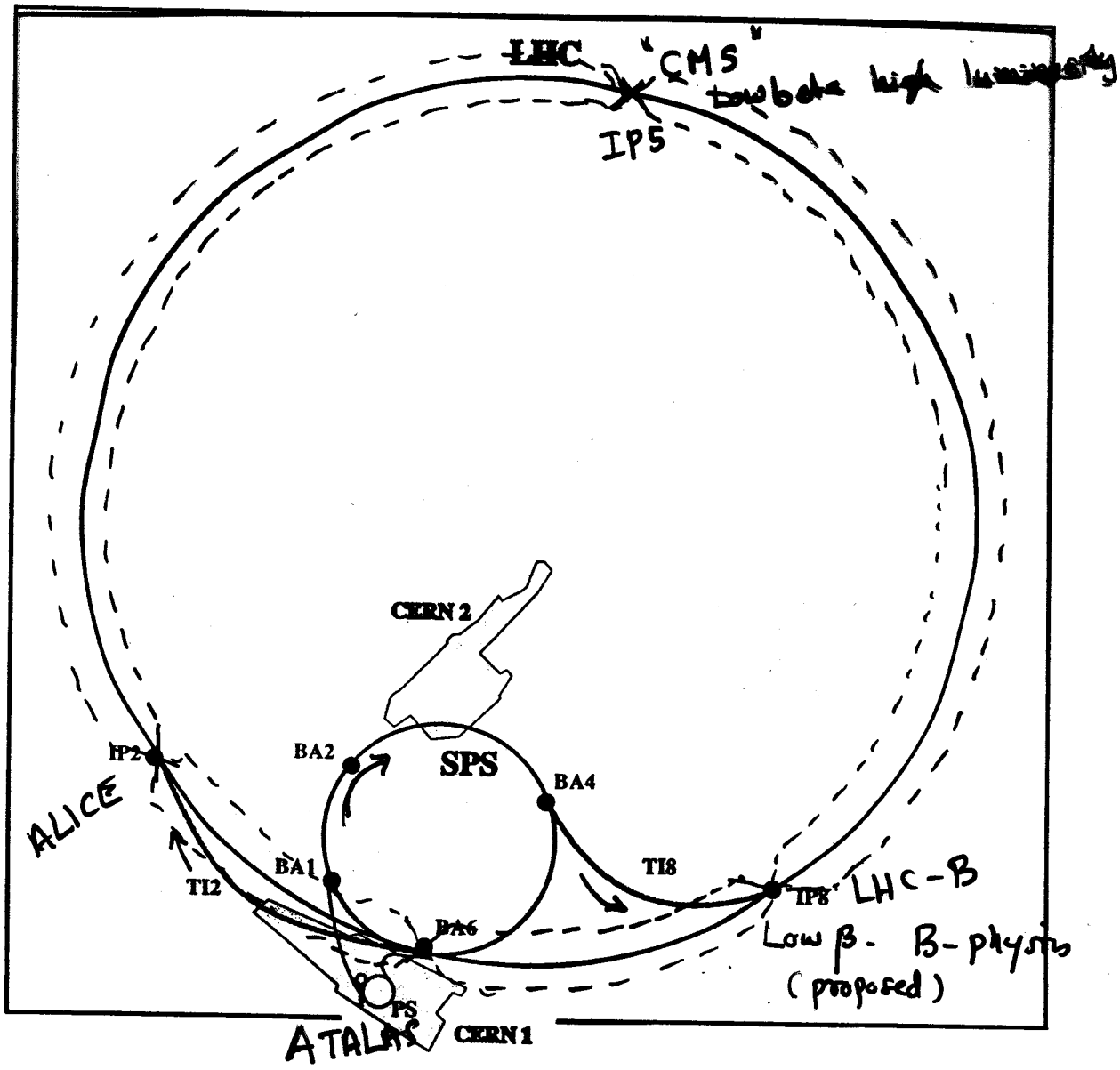

Figure 1: SPS–LHC transfer lines

number of Superperiod = 1
pseudo-periodicity = 8 ⇒ # of arcs
Lattice type = FODO
number of lattice/cell = 23
Crossing angle = 200 μradian.
γ_{tr} = 53.7
α - momentum comp. = 0.0003473 (0.00316 for Tev)
ν_H = 63.28 ν_V = 63.31
β^* @ Ip = 0.5 m.

LHC 4

RF & Feedback

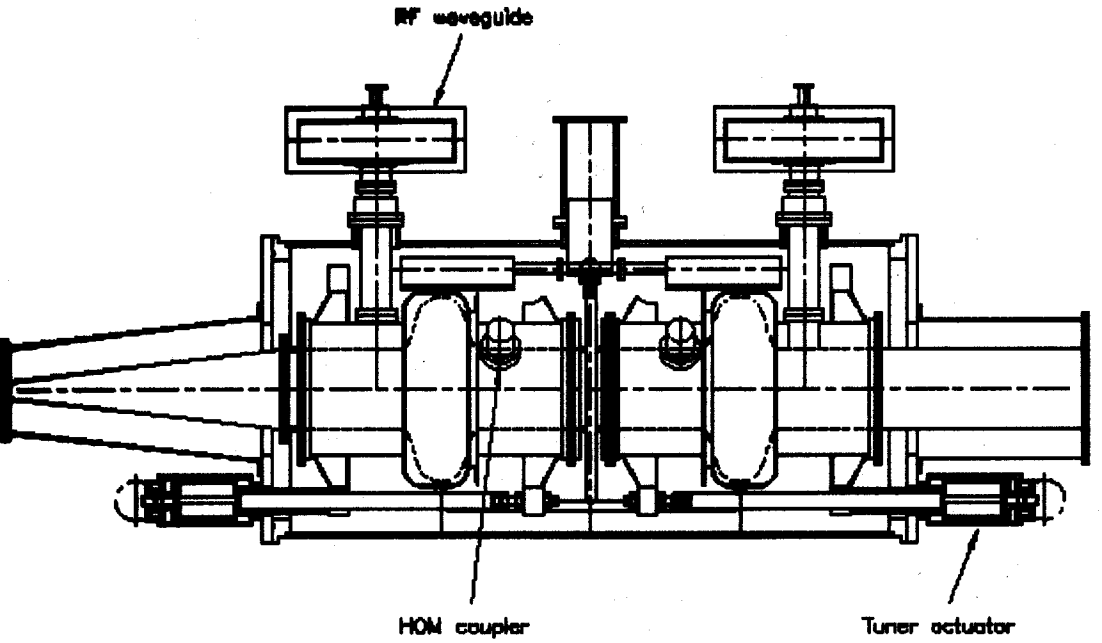

Superconducting RF Cavity

EDMS Support *Statistics* *Last update: 29-APR-98*

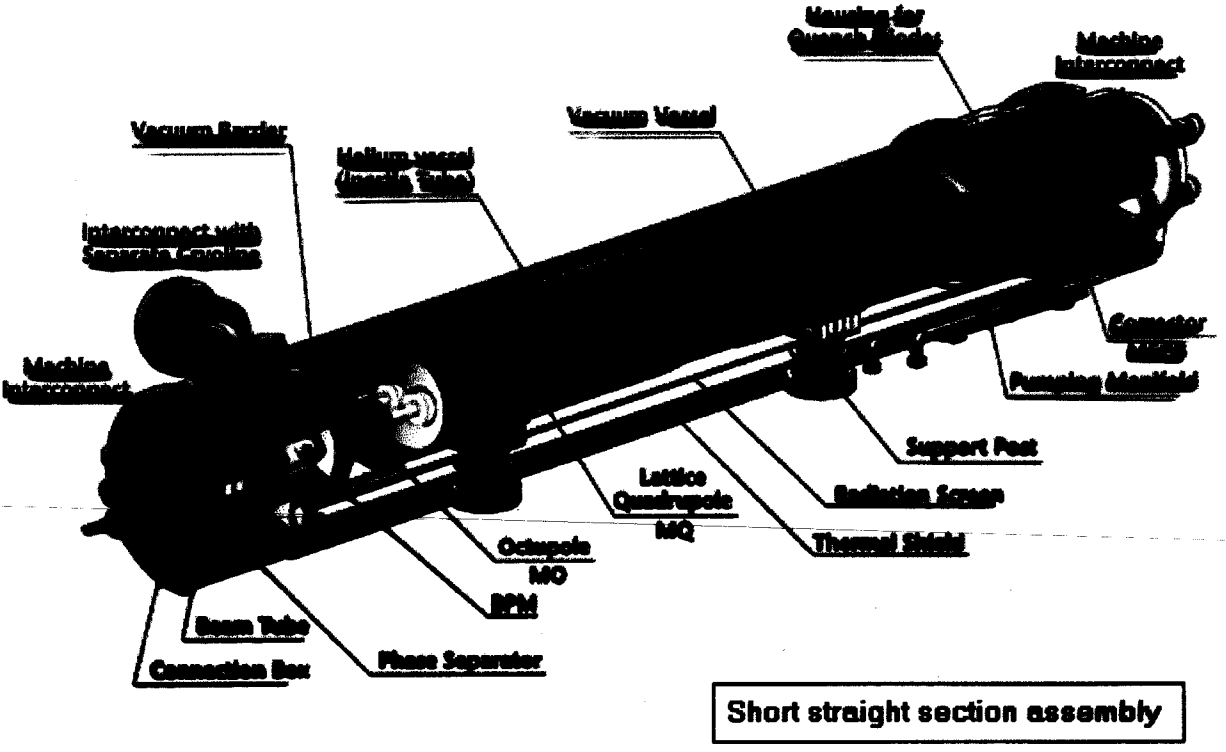

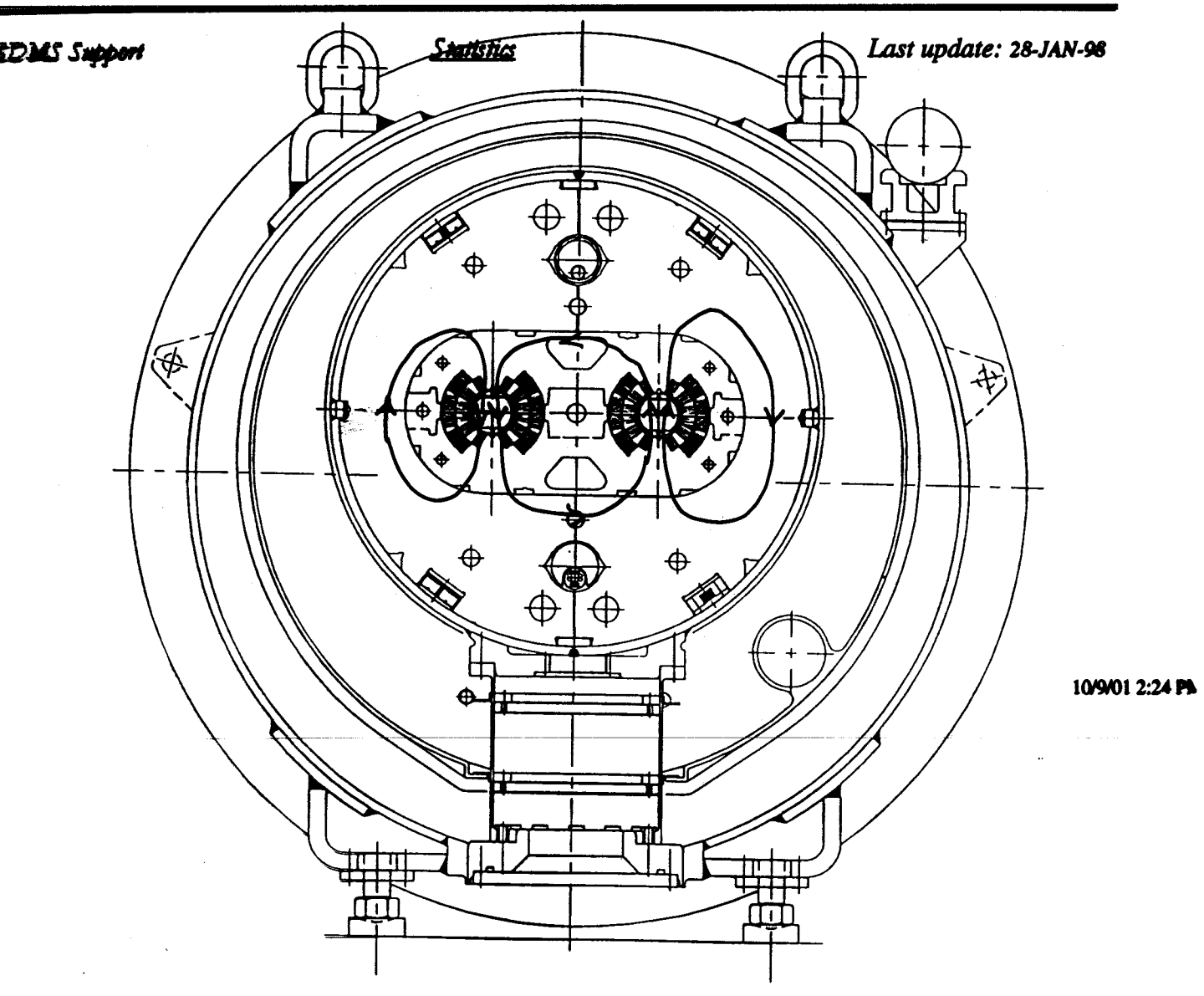

Fig. 2 LHC dipole

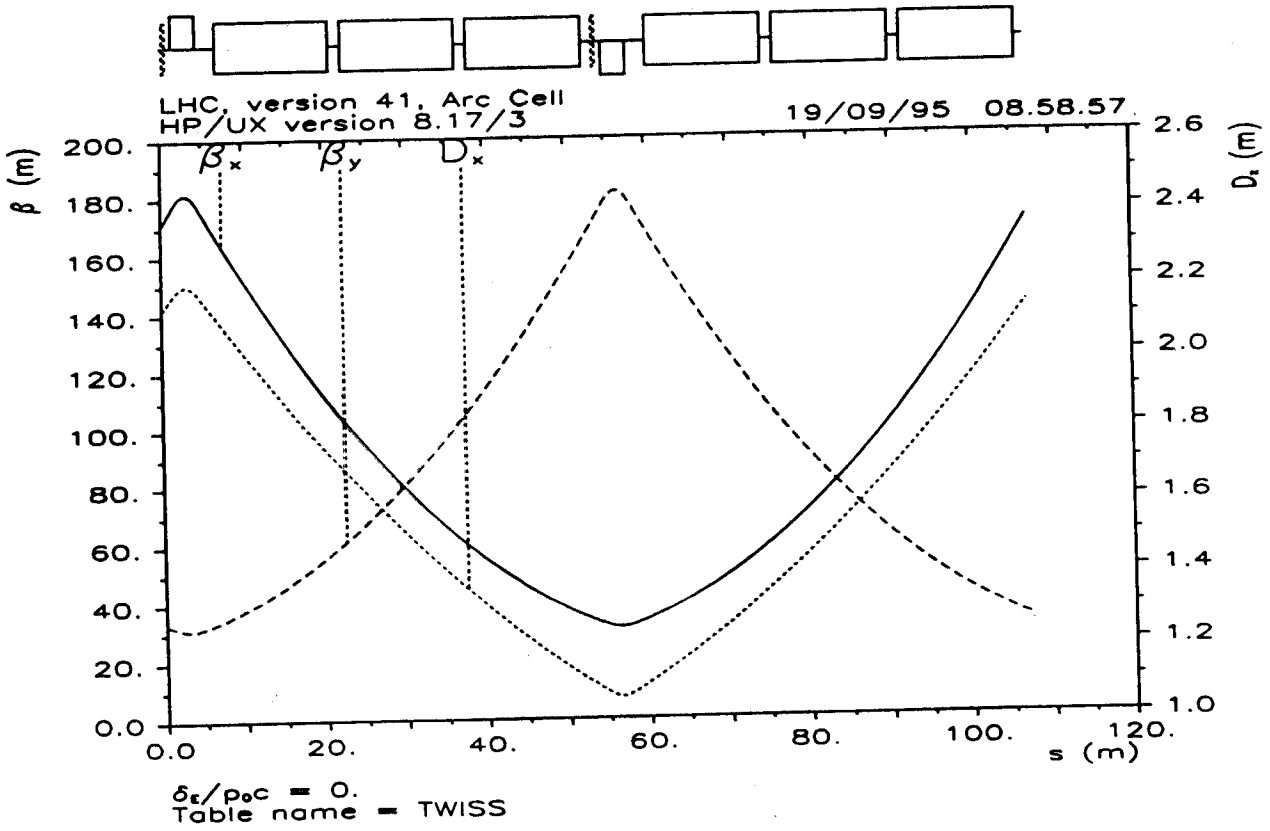

Figure 2: Optics of the standard arc cell

LHC-7

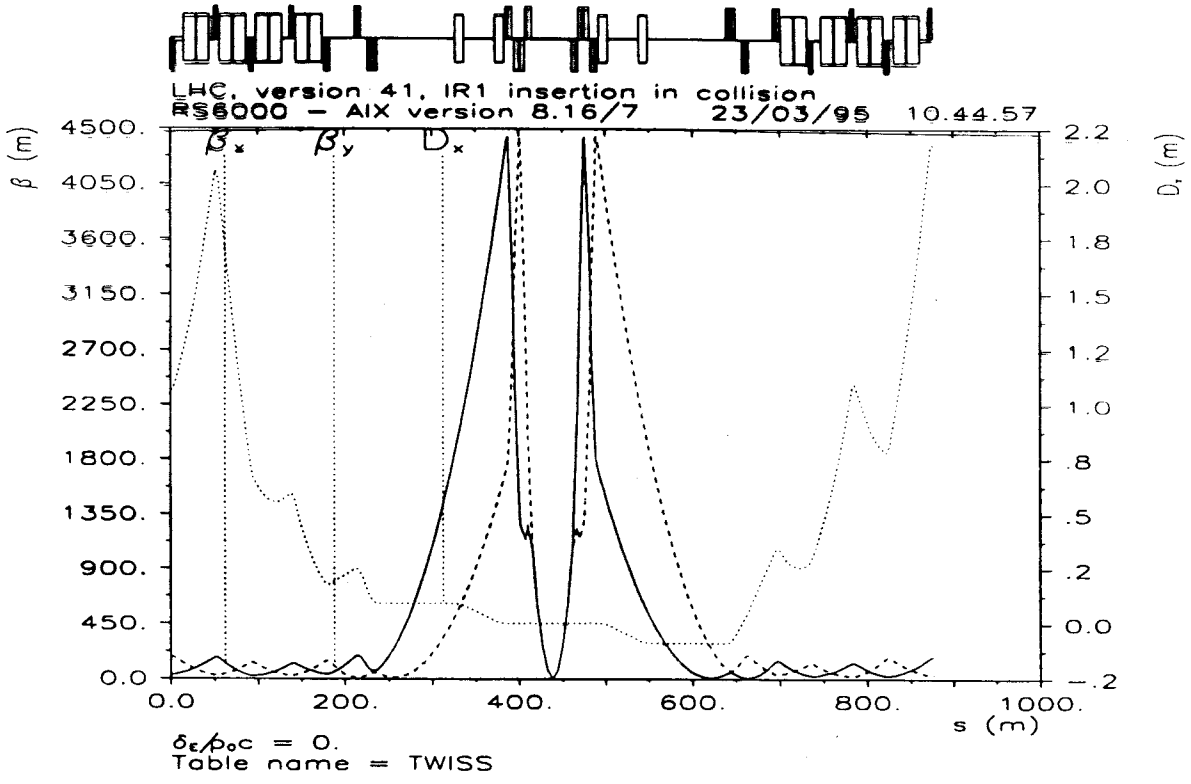
LHC, version 41, IR1 insertion in collision
RS6000 – AIX version 8.16/7 23/03/95 10.44.57
β (m)
D_x (m)
β_x
β_y
D_x
s (m)
δ_E/p_0c = 0.
Table name = TWISS

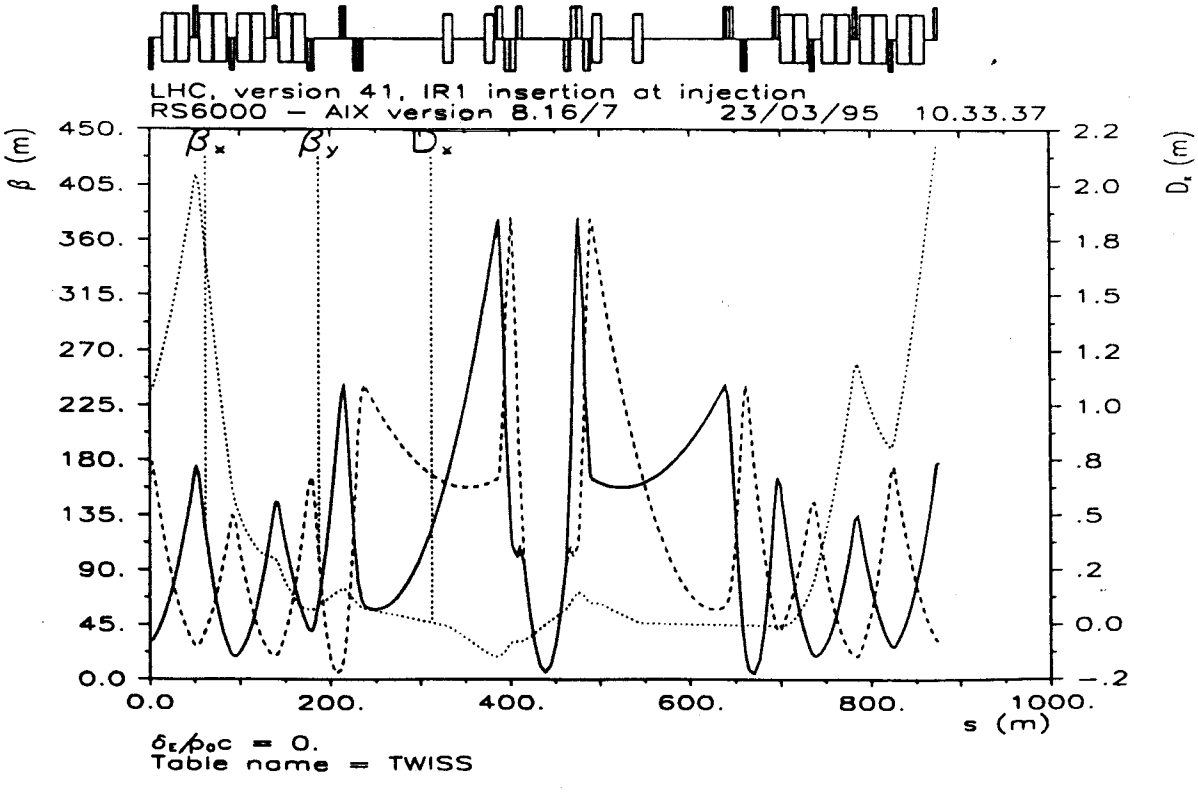
LHC, version 41, IR1 insertion at injection
RS6000 – AIX version 8.16/7 23/03/95 10.33.37
β (m)
D_x (m)
β_x
β_y
D_x
s (m)
δ_E/p_0c = 0.
Table name = TWISS

Report by Dugan. G.

VLHC

Table I : Machine parameters

Parameter	High field-new technology	High field-known technology	Low Field	Units
CM Energy	100	100	100	TeV
Dipole field	12.6	9.5	1.8	T
Circumference	104	138	646	km
Synchrotron radiation damping time (horizontal amplitude)	2.6	4.6	*antidamped*	hr
Initial/peak luminosity	.35/1.2	.35/1.0	1./1.	10^{34} cm^{-2}sec^{-1}
Integrated luminosity per day	500	500	700	pb^{-1}
Number of stores per day	2	2	1	
Initial rms normalized emittance	1.	1.	1.	π μm-rad
β^*	20	20	20	cm
Protons/bunch	0.5	0.5	0.94	10^{10}
Number of bunches	20794	27522	129240	
Equilibrium emittance (x)	144.2	62	1.8	10^{-3} π μm-rad
Bunch spacing	16.7	16.7	16.7	nsec
Beam stored energy	.89	1.18	9.73	GJ
Synchrotron radiation power/ring	189	143	48	kW
Total protons/ring	1.1	1.5	12.2	10^{14}
Initial/peak interactions/crossing	7.5/21.5	7.5/21.5	21.5/21.5	
Beam lifetime (pp collisions only)	34	45	130	hr
$\sigma_{inelastic}$	130	130	130	mbarn
Initial beam-beam $\Delta\nu$ (total)	5.1	5.1	11.6	10^{-3}
Revolution frequency	2.89	2.18	.46	kHz
Synchrotron frequency	8.9	5.8	.86	Hz
Rf Voltage	100	100	100	MV
Radio-frequency	360	360	360	MHz
Energy loss/turn	3678	2778	526	keV
Rms relative energy spread(collision)	15.6	18.0	39.0	10^{-6}
Fill time	16.3	16.3	28	min.
Acceleration time	5.8	7.6	35.9	min.
Total time: fill and accelerate	22.1	24	63.9	min.
Longitudinal impedance threshold: $\frac{Z_{\parallel}}{n}$(collision)	3.6	2.7	1.1	Ω
Transverse impedance threshold: $Z_{\perp}$(injection)	731	635	250	MΩ/m
Resistive-wall transverse impedance: $Z_{RW}(\frac{c}{\sigma_s})$ (injection)	0.4	0.5	98	MΩ/m
Resistive-wall multibunch instability growth time	472	310	.36	turns
Total current	.05	.05	.09	Amp
Peak current(inj)	3.6	3.6	4.2	Amp
$\langle\beta\rangle$	255	255	382	m
Tune	65	86	269	
Half cell length (assumed 90°cells)	200	200	300	m
Beam pipe radius	1.65	1.65	1.0	cm
Beam pipe	Cold, Cu	Cold, Cu	Warm, Al	

Table II: Energy/power parameters

Parameter	LHC	High field	Low Field A	Low field B	Units
CM Energy	14	60	60	200	TeV
Bunch spacing	25	100	57	57	nsec
Beam stored energy	.377	.212	3.04	19	GJ
Synchrotron radiation power/ring	4.1	27	8.9	184	kW
Total protons/ring	3.37	.44	6.34	11.88	10^{14}

From eq. (10), the luminosity

N^2 $N^2 c$

Table I: Luminosity parameters

Parameter	LHC	High field	Low Field A	Low field B	Units
CM Energy	14	60	60	200	TeV
Dipole field	8.4	12.6	1.8	1.8	T
Circumference	26.7	62.3	388	1300	km
Synchrotron radiation damping time	51.2	4.4	189.2	57.3	hr
Initial luminosity	1	.35	1	1	10^{34} $cm^{-2}sec^{-1}$
Rms normalized emittance	3.75	1.5	1.5	1.5	π μm-rad
β^*	.5	.2	.2	.2	m
Protons/bunch	9.5	2.1	2.8	1.6	10^{10}
Number of bunches	3570	2090	22880	76650	
Equilibrium emittance (x)	.45	23.8	.23	1.8	10^{-3} π μm-rad

Table V: Longitudinal parameters (in collision)

Parameter	LHC	High field	Low Field A	Low field B	Units
CM Energy	14	60	60	200	TeV
Revolution frequency	11.2	4.8	.77	.23	kHz
Synchrotron frequency	20.3	9.8	.59	.14	Hz
Rf Voltage	18	50	25	50	MV
Rms longitudinal bunch area	.78	.52	1.0	2.3	eV-sec
α_p: Slip factor	2.2	2.2	.10	.03	10^{-4}
Harmonic number	3.564	8.4	52	174	10^4
Radio-frequency	400	403	402	402	Mhz
Energy loss/turn	6.8	792	113	4189	keV
Bucket area	10	24	31	73	eV-sec
Rms bunch length at IP	7.5	4	5	5	cm
Rms relative energy spread	142	42	68	49	10^{-6}

TABLE 2. LETTER DESIGNATIONS FOR FREQUENCY BANDS

Letter	Frequency Band
L	1000–2000 MHz
S	2000–4000 MHz
C	4000–8000 MHz
X	8000–12 000 MHz
K_u	12–18 GHz
K	18–27 GHz
K_a	27–40 GHz
V	40–75 GHz
W	75–110 GHz

Source: IEEE Standard Letter Designations for Radar Frequency Bands, IEEE Std 521-1984, reaffirmed 1989.

Linear Colliders

There is broad agreement in HEP community that a linear e^+e^- collider with an initial energy of $E_{cm} = 350 - 500$ GeV and $\mathcal{L} = 10^{33} cm^{-2} s^{-1}$ is of fundamental importance for the future development of particle physics. Such an accelerator is complementary to LHC in many respects, and should be built as a next accelerator.

Over the past decade several groups worldwide have been pursuing different linear collider designs. Among them NLC and TESLA are two major designs at hand. The major difference between these two designs is in choice of accelerating structures.

Tesla	NLC
1) Uses 9-cell niobium cavities cooled by superfluid He at $T = 2^\circ K$	1) Normal conducting rf - cavities
2) Cavities operate at L- band frequencies (1.3 GHz)	2) Cavities operate at L, S, UHF, X - band frequencies (0.7 - 11.424 GHz)

Tesla	NLC
3) Design gradient @ 500 GeV is $E_{acc} = 23.4$ MV/m and quality factor $Q_0 = 10^{10}$ There is a potential for $E_{acc} > 50$ MV and seen up to $E_{acc} \sim 42$ MV	3) Generally Q of the order of 30 K to 100 K. Accelerating gradient- 29.4 MV/m for 500 GeV and 55.1 for 1 TeV
4) The longitudinal and transverse wakefields per unit length of the accelerator scales $\approx f^2$ and f^3, respectively. Since "tesla" uses L-band cavities the emittance dilution due to wake field is not as much of a concern as in case of NLC. Also alignment tolerence is more relaxed with tesla design.	4) Just like at SLC, alignment is very stringent.
5) Tesla design is relatively insensitive to mechanical vibration because bunch-to-bunch feedback can be used for correcting orbit within one pulse.	5) mechanical vibration and correcting orbit to it may be problem. This might lead to luminosity dilution.
6) Head-on (zero-crossing angle) collision scheme is possible with super conducting quadrupole in IP	6) crossing angle is part of the design.

TESLA

7) $L = 3.4 \times 10^{34}\ cm^{-2} s^{-1}$

$E_{cm} = 500$ GeV

8) Beam loss due to Beamsstrahlung

$\delta(\%) = 3.2$

9) Beam size @ IP

$\sigma^*_{x,y} = 553, 5$ nm

$\sigma_z = 0.3$ mm

10) Total power (2-linac) (main RF, and Cryogenic)

97 MW

Beam power

$P_b/2 \leq 11.3$ MW

NLC

7) $L = 5.5 \times 10^{33}\ cm^{-2} s^{-1}$

$E_{cm} = 500$ GeV

$L = 1.1 \times 10^{34}\ cm^{-2} s^{-1}$

$E_{cm} = 1$ TeV

8) $\delta(\%) = 3.2$ @ 500 GeV

$= 12.6$ @ 1 TeV

9) $\sigma_{x,y} = 294, 6.3$ nm @ 500 GeV

$= 250, 5.1$ nm @ 1 TeV.

$\sigma_z = 0.125$ mm @ 500 GeV

0.150 mm @ 1 TeV

10) 121 MW @ 500 GeV

193 MW @ 1 TeV

4.8 MW @ 500 GeV

7.9 MW @ 1 TeV

Linear Colliders

A linear collider Luminosity $\mathcal{L}$ is given by

$$\mathcal{L} = \frac{n_b N_e^2 f_{rep}}{4\pi \sigma_x^* \sigma_y^*} \times H_D$$

where

n_b = number of bunches / pulse

N_e = # of e^-/e^+ per bunch

f_{rep} = pulse repetition freq^n.

$\sigma_{x,y}^*$ = H and V- beam size at interaction

H_D = Disruption enhancement factor ($\simeq 2$)

In terms of average beam power $P = E_{cm} n_b N_e f_{rep}$

$$\mathcal{L} = \frac{P_b}{E_{cm}} \times \frac{N_e}{4\pi \sigma_x^* \sigma_y^*} \times H_D$$

Effect of Beamstrahlung :-

Particle emit hard synchrotron radiation in the strong em space charge field of the opposing bunch. The average fractional beam energy loss from beamstrahlung is

$$\Delta E = \frac{0.86\, r_e^3 N_e^2 \gamma}{\sigma_z (\sigma_x^* + \sigma_y^*)^2} \Rightarrow \text{we need}$$

NLC Design Report

NLC 1

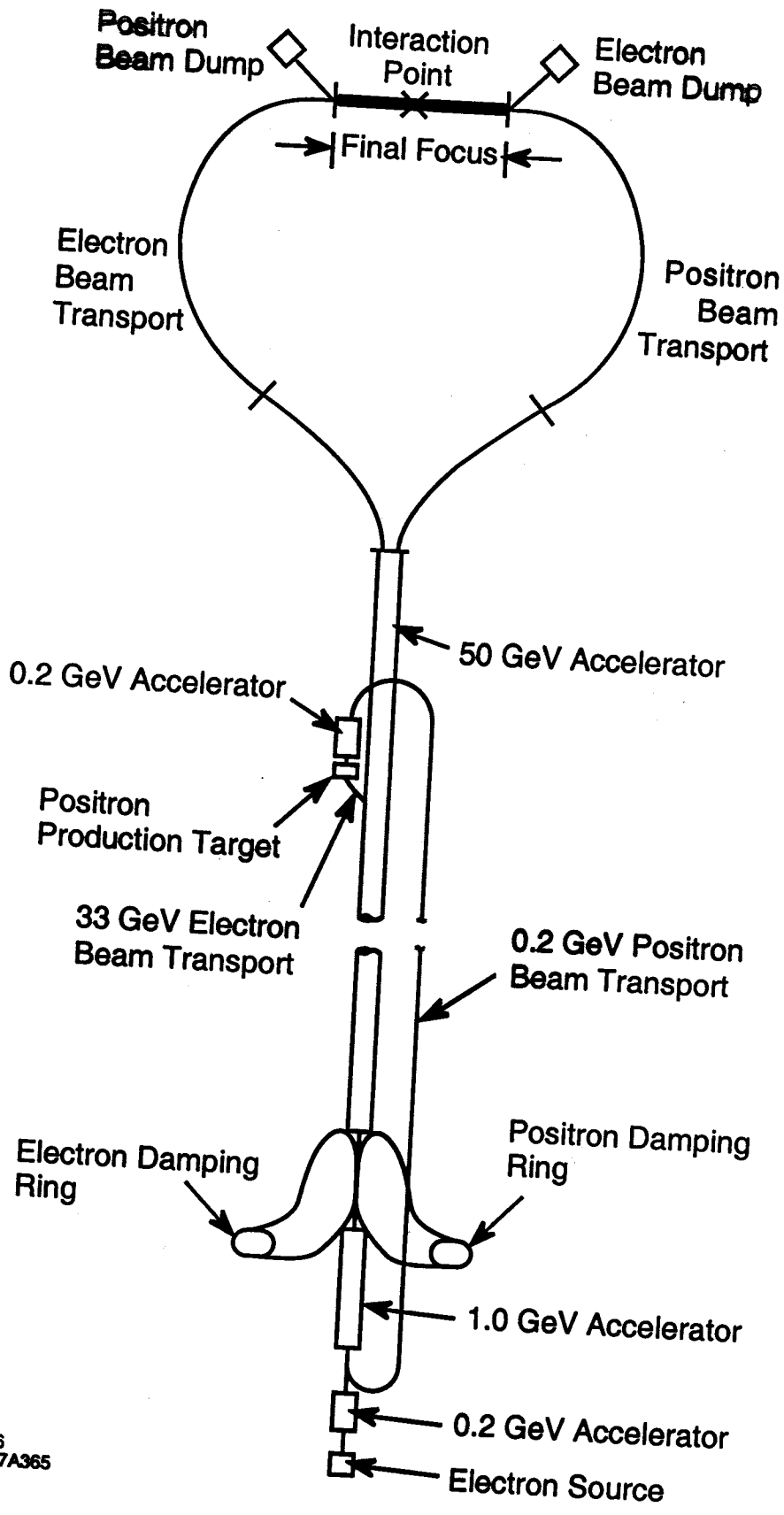

Figure 1-3. *The Stanford Linear Collider (SLC).*

NLC 2

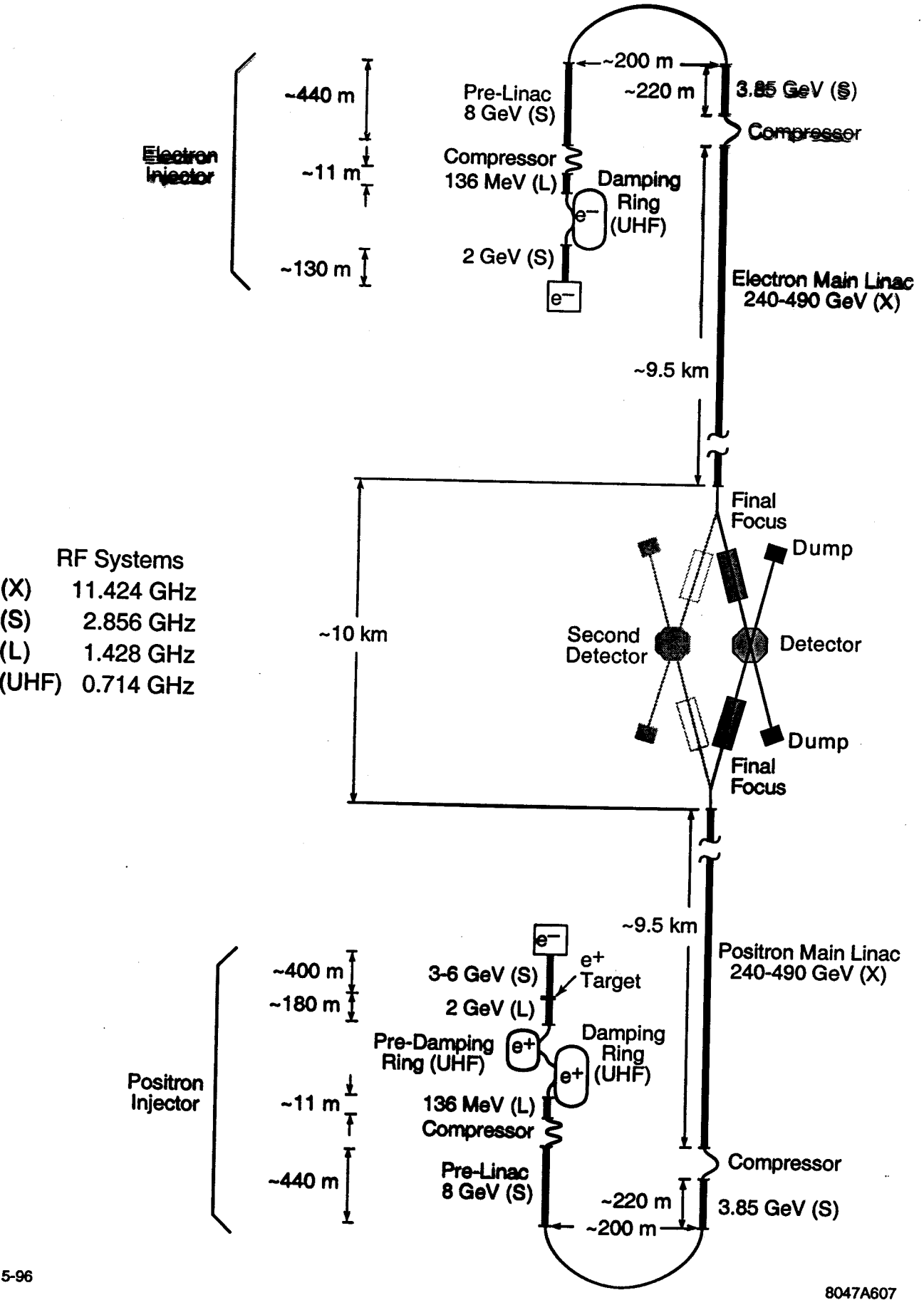

Figure 1-11. *Schematic layout of NLC systems (not to scale).*

6 CPI

	Rf Freq (GHz)	Rf Grad (MV/m)	Total Length (km)	Beam Power (MW)	σ_y (nm)	Luminosity (10^{33} cm^{-2} s^{-1})
SuperC	1.3	25	30	8.2	19	6
S-Band	3.0	21	30	7.3	15	5
X-Band	11.4	50	16	4.8	5.5	6
2-Beam	30.0	80	9	2.7	7.5	5

Table 1-1. *Linear collider design parameters (E_{cm} = 500 GeV).*

Facility	Location	Goal	Operations
SLC	SLAC	Prototype Collider	1988–1998
ATF	KEK	Injector	1995
		Damping Ring	1996
TTF	DESY	SuperC Linac	1997
SBTF	DESY	S-band Linac	1996
NLCTA	SLAC	X-band Linac	1996
CTF	CERN	2-Beam Linac	1996
FFTB	SLAC	Final Focus Interaction Region	1994

Table 1-2. *Linear collider test facilities around the world.*

1.3 The Next Linear Collider

1.3.1 Technology Choice and Design Philosophy

The goal to reach 1 to 1.5 TeV

NLC 3

	NLC-Ia	NLC-Ib	NLC-Ic	NLC-IIa	NLC-IIb	NLC-IIc
Nominal CMS Energy (TeV)		0.5			1.0	
Luminosity w/ IP dilutions (10^{33})	5.8	5.5	6.0	10.2	11.0	10.6
Repetition Rate (Hz)		180			120	
Bunch Charge (10^{10})	0.65	0.75	0.85	0.95	1.10	1.25
Bunches/RF Pulse		90			90	
Bunch Separation (ns)		1.4			1.4	
$\gamma\epsilon_x$ at IP (10^{-8} m-rad)		400			400	
$\gamma\epsilon_y$ at IP (10^{-8} m-rad)	7	9	11	9	11	13
β_x/β_y at IP (mm)	8/0.125	10/0.150	10/0.200	10/0.125	12/0.150	16/0.200
σ_x/σ_y at IP (nm)	264/5.1	294/6.3	294/7.8	231/4.4	250/5.1	284/6.5
σ_z at IP (μm)	100	125	150	125	150	150
Υ (Beamstrahlung Param.)	0.10	0.09	0.09	0.33	0.29	0.29
Pinch Enhancement	1.4	1.4	1.5	1.4	1.4	1.5
amstrahlung δ_B (%)	3.5	3.2	3.5	12.6	12.6	12.1
# Photons per e^-/e^+	0.97	1.02	1.16	1.65	1.77	1.74
Unloaded Gradient (MV/m)		50			85	
Effective Gradient (MV/m)	31.5	29.4	27.2	58.3	55.1	51.4
Active Linac Length (km)		8.15			8.90	
Min. Total Site Length (km)		23.8			30.5	
Max. Beam Energy (GeV)	267	250	232	529	500	468
Power/Beam (MW)	4.2	4.8	5.5	6.8	7.9	9.0
# of Klystrons		4528			9816	
Klystron Peak Pwr. (MV)		50			72	
Pulse Comp. Gain		3.6			3.6	
RF System Efficiency (%)		28			37	
Total AC Power (MW)		121			193	

Table 1-3. *Present IP and linac parameters of NLC designs.*

http://tesla.desy.de/

Tesla 1

Tera eV
Energy
Super conducting Cavity
Linear
Accelerator

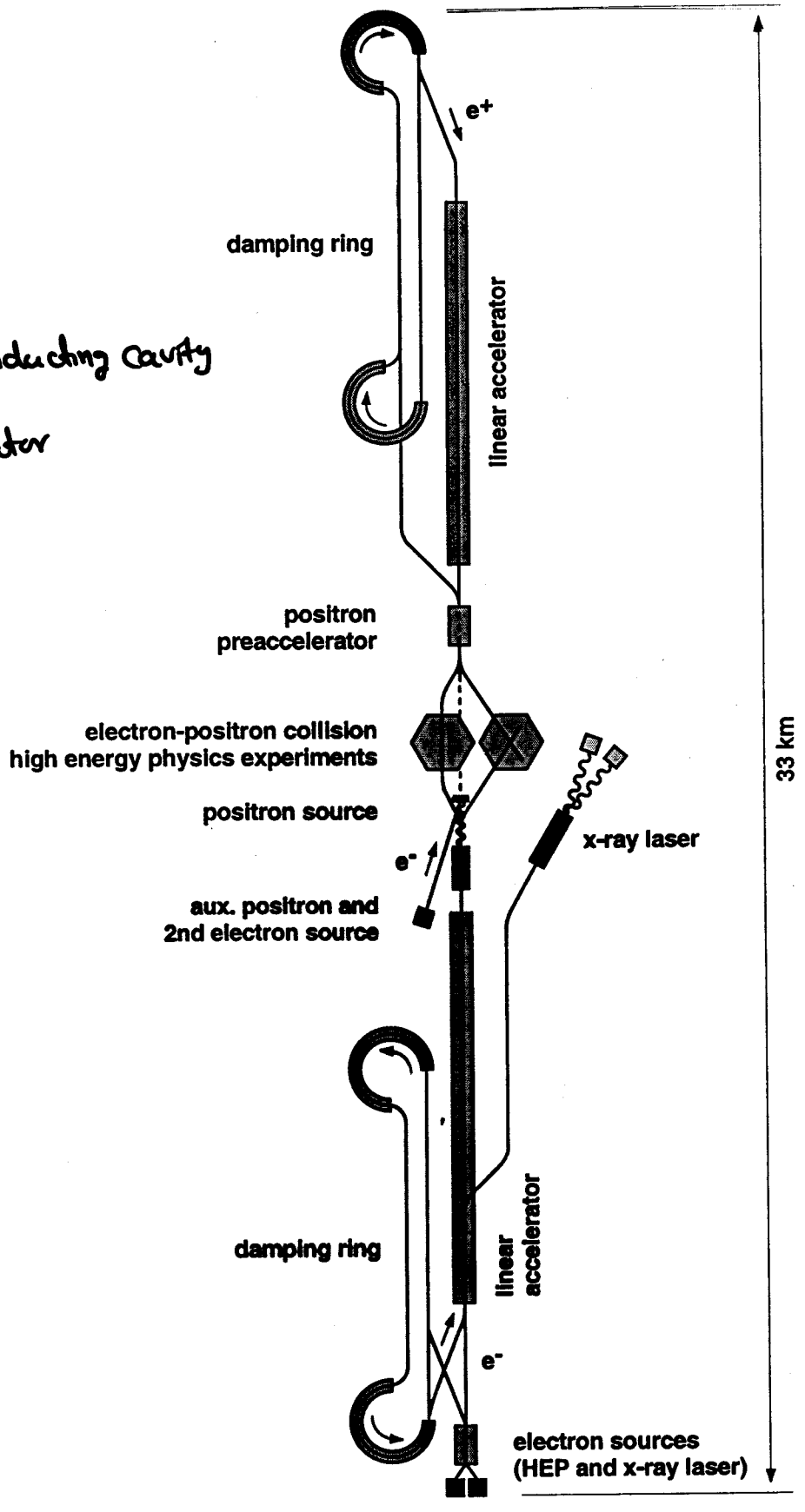

Figure 1.2.1: *Sketch of the overall layout of TESLA.*

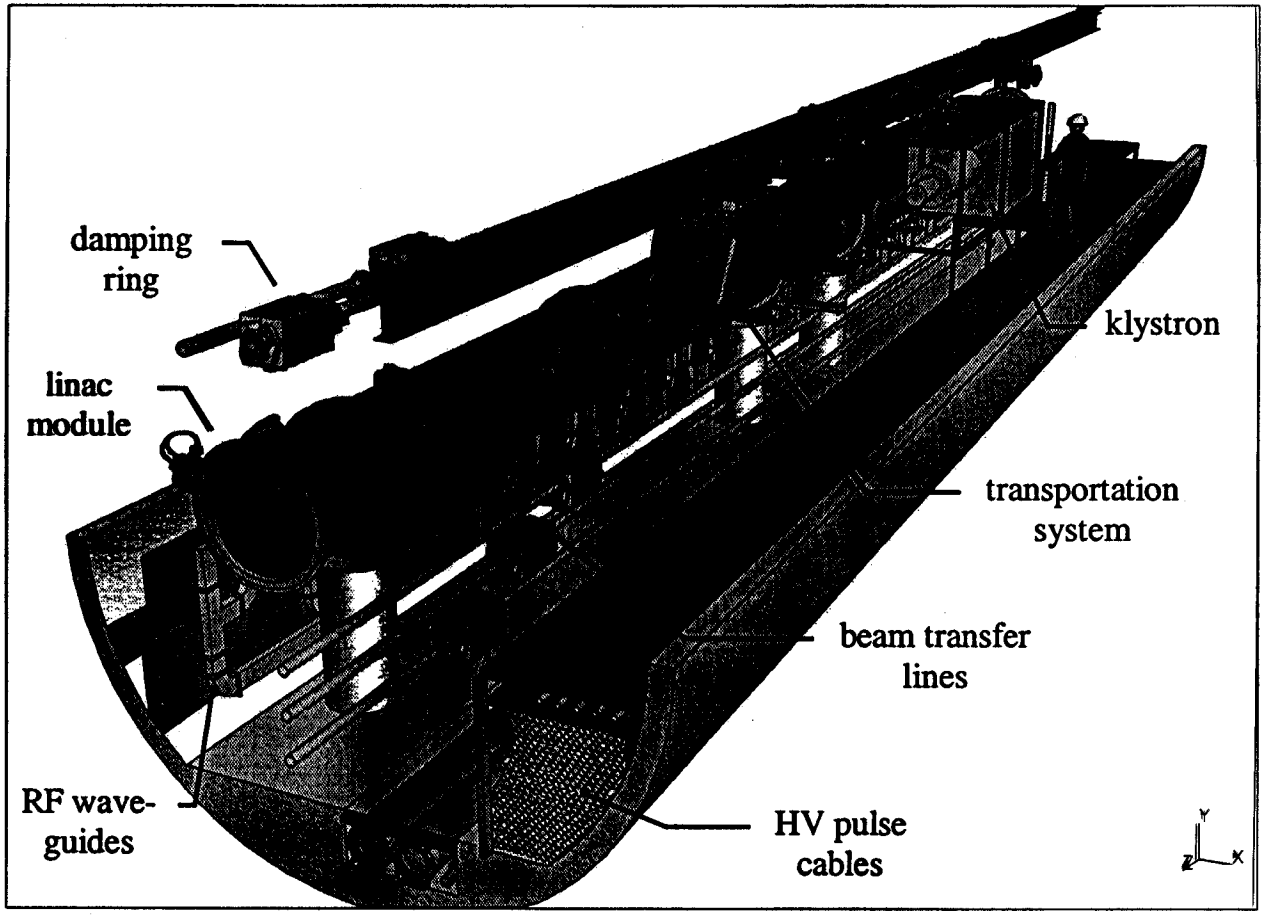

Figure 1.2.2: *Sketch of the 5 m diameter* ***TESLA linac tunnel.***

Tesla -2

		TESLA-500
Accelerating gradient	E_{acc} [MV/m]	23.4
RF-frequency	f_{RF} [GHz]	1.3
Fill factor		0.747
Total site length	L_{tot} [km]	33
Active length	[km]	21.8
No. of accelerator structures		21024
No. of klystrons		584
Klystron peak power	[MW]	9.5
Repetition rate	f_{rep} [Hz]	5
Beam pulse length	T_P [μs]	950
RF-pulse length	T_{RF} [μs]	1370
No. of bunches per pulse	n_b	2820
Bunch spacing	Δt_b [ns]	337
Charge per bunch	N_e [10^{10}]	2
Emittance at IP	$\gamma\varepsilon_{x,y}$ [10^{-6}m]	10, 0.03
Beta at IP	$\beta^*_{x,y}$ [mm]	15, 0.4
Beam size at IP	$\sigma^*_{x,y}$ [nm]	553, 5
Bunch length at IP	σ_z [mm]	0.3
Beamstrahlung	δ_E [%]	3.2
Luminosity	L_{e+e-} [10^{34}cm^{-2}s^{-1}]	3.4
Power per beam	$P_b/2$ [MW]	11.3
Two-linac primary electric power (main linac RF and cryogenic systems)	P_{AC} [MW]	97
e^-e^- collision mode:		
Beamstrahlung	$\delta_{E,e-e-}$ [%]	2.0
Luminosity	L_{e-e-} [10^{34}cm^{-2}s^{-1}]	0.47

able 1.3.1: *TESLA parameters for the E_{cm} = 500 GeV baseline design. The machine ngth includes a 2% overhead for energy management. The klystron power and primary ectric power quoted include a 10% regulation reserve.*

Energy Upgrade Potential

e length of the machine must be increased to achieve centre-of-mass energies above TeV. However, a significant energy upgrade is possible within the site length for the rent 500 GeV design, since:

		TESLA-800
Accelerating gradient	E_{acc} [MV/m]	35
Fill factor		0.79
Repetition rate	f_{rep} [Hz]	4
Beam pulse length	T_P [μs]	860
No. of bunches per pulse	n_b	4886
Bunch spacing	Δt_b [ns]	176
Charge per bunch	N_e [10^{10}]	1.4
Emittance at IP	$\gamma\varepsilon_{x,y}$ [10^{-6}m]	8, 0.015
Beta at IP	$\beta^*_{x,y}$ [mm]	15, 0.4
Beam size at IP	$\sigma^*_{x,y}$ [nm]	391, 2.8
Bunch length at IP	σ_z [mm]	0.3
Beamstrahlung	δ_E [%]	4.3
Luminosity	L [10^{34}cm^{-2}s^{-1}]	5.8
No. of klystrons		1240
Power per beam	$P_b/2$ [MW]	17
Two-linac primary electric power	P_{AC} [MW]	≈150

Table 1.4.1: *TESLA parameters for an upgrade to 800 GeV. It is assumed that the linac is built with 2×9-cell superstructures and the RF-power has been doubled (see text).*

Tesla-4