Accelerator Operation Modes

Fixed Target Mode

C. M. energy in fixed target experiments

$$W^2 = s = (\vec{p}_1 + \vec{p}_2)^2$$

$\vec{p}_1 = (m_1, \vec{p}_1)$; $\vec{p}_2 = (m_2, \emptyset)$

incident beam — fixed target

$$s = m_1^2 + m_2^2 + 2Em_2 \quad \text{where } E = \sqrt{m_1^2 + |p_1|^2}$$

For a proton beam incident on a hydrogen target (stationary) and $E_{beam} = E = 1000$ GeV;

$$s = 2*(.938)^2 + 2000*.938$$
$$= 1877.76 \text{ GeV}$$

∴ The available energy in the interaction

$$\boxed{W = \sqrt{s} = 43.3 \text{ GeV}}$$

→ FT mode necessary to make secondary or tertiary beams of other types of particles

Collider Mode / Storage Ring

2 beams each with 1 TeV energy colliding head-on will provide

$$\sqrt{s} = 2000 \text{ GeV} = 2 \text{ TeV}$$

⇒ 46 times more energy than in fixed target mode.

LUMINOSITY

Fixed Target Experiments:

No of interactions,

$N_{ev} \propto \sigma$, the interaction cross section

$\propto N_0$, the beam flux

$\propto N_t$, No. of target atoms / unit area

$$N_t = \frac{N_A \cdot \rho \cdot l}{A} \; ; \; F = \frac{1}{N_t}$$

$$N_{ev} = N_0 \cdot N_t \cdot \sigma = \frac{N_0}{F} \cdot \sigma$$

$$F = \text{Target Constant} = \frac{A}{N_A \cdot \rho \cdot l} \simeq 2.3 \times 10^{-24} \, cm^2$$

~~(fixed~~

$= 2.3 b$

for liquid hydrogen target ($\rho = 0.071 g/cc$) and length $= 10$ cm

$$\boxed{N_{ev}/_{sec} = L * \sigma}$$

$$L = \frac{N_0/sec}{F} = \text{Luminosity}.$$

for $F = 2.3 b$, $N_0 = 10^{10}$ particles / sec

$$L = \frac{10^{10}}{2.3 \times 10^{-24} cm^2} = 4.3 \times 10^{+9} \times 10^{+24} \, cm^{-2} s^{-1}$$

$$= 4.3 \, nb^{-1} s^{-1}$$

$\therefore$ A cross section of 1 nb will yield 4.3 events / sec.

Collider Experiments

Luminosity

$$\mathcal{L} = \frac{N_p \cdot N_{\bar{p}} \cdot f \cdot n_b}{4\pi\, \sigma_b^2}$$

$N_p, N_{\bar{p}}$ = No. of p or $\bar{p}$ particles per bunch

f = Revolution frequency

n_b = No. of bunches

σ_b = beam-spread at crossing (transverse size of the bunch)

Say $N_p \sim 10^{13}$, $N_{\bar{p}} \sim 10^{11}$

$$\mathcal{L} = \frac{10^{13} * 10^{11} * 50 \times 10^3 * 6}{4\pi * (.1)^2}\ cm^{-2}s^{-1}$$

$$\simeq \frac{5}{2} * 10^{30}\ cm^{-2}s^{-1} = \underline{\underline{2.5 \times 10^{30}}}\ cm^{-2}s^{-1}$$

Tevatron in Run II,

$$\mathcal{L} \simeq 10^{31} - 2.5 \times 10^{32}\ cm^{-2}s^{-1}$$

$\sigma(W^{\pm}) \simeq 2\,nb$ @1.8 TeV
(leptonic mode)

At $L = 10^{31}\ cm^{-2}s^{-1}$, $N = L \cdot \sigma = 10^{31}\ cm^{-2}s^{-1} \times 2\,nb$

$= 10^{-2}\,nb^{-1}s^{-1} \times 2\,nb$

$= 2$ events $/100\,s \Rightarrow 1728$ W's/day

Integrated luminosity is the key! More the better!

$$\mathcal{L} = \int L\,dt = \int_{run} 10^{31}\,cm^{-2}s^{-1} * dt$$

a year in seconds

run efficiency

$$= 10^{31} * 3.15\times10^{7} * 0.5$$

$$\simeq 10^{38} \times 1.58 = 10^{24}\times 10^{12}\times 158\ cm^{-2}s^{-1}$$

$$= \underline{\underline{158\ pb^{-1}}}\ /\text{year}$$

$\therefore$ For 1 pb cross section

$$N = L\sigma = 158 \text{ events}$$

Therefore Luminosity can be defined as

$$\boxed{L = \frac{N}{\sigma} = 158 \text{ events}/pb}$$

$\therefore$ Let us say, $\frac{1}{2}\,pb^{-1}$/day

$\sigma(t\bar{t}) = 8\ pb$ at 2 TeV

$\Rightarrow$ 4 $t\bar{t}$ events/day ! even at $\underline{10^{31}\,cm^{-2}s^{-1}}$

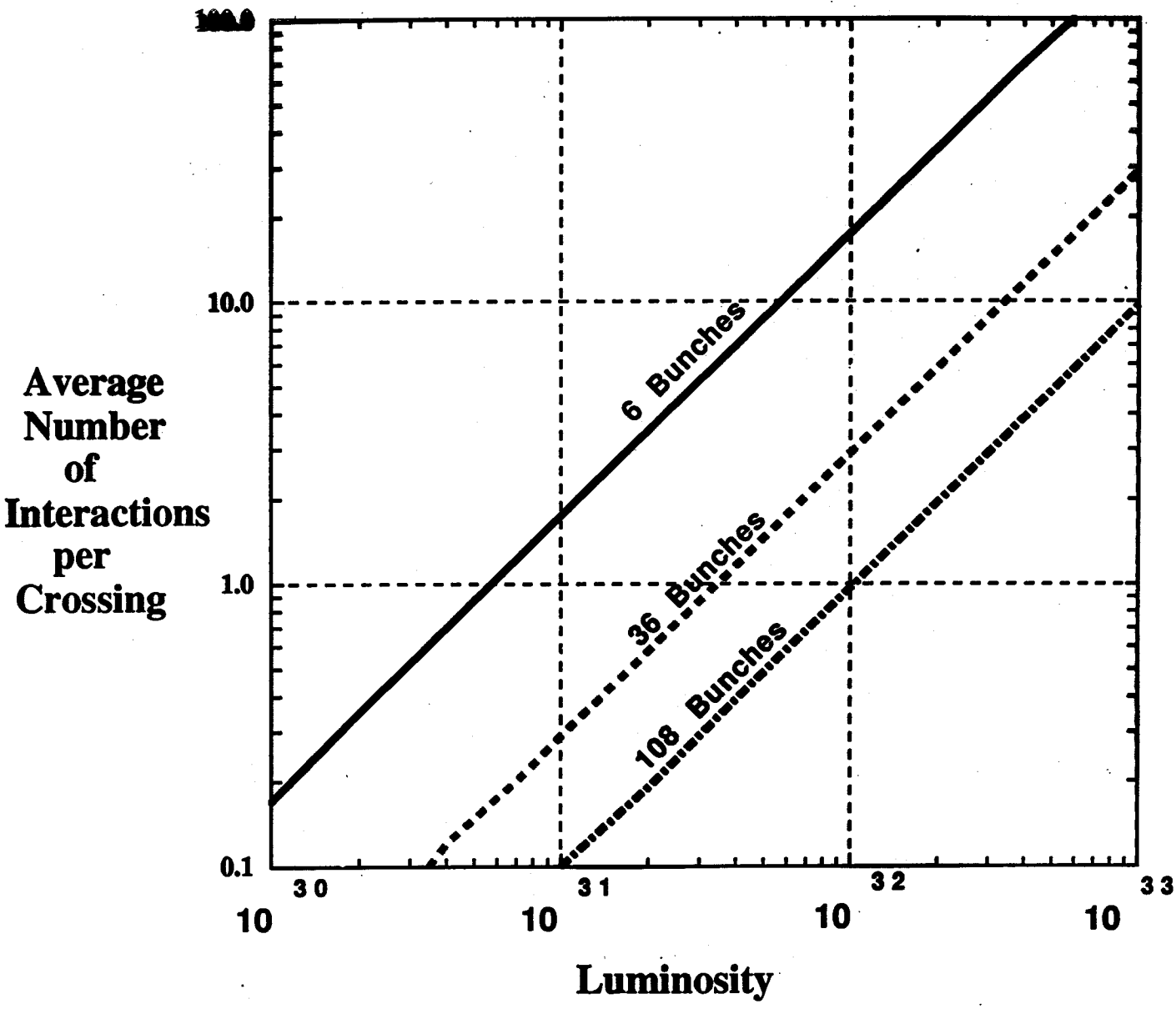
100.0
10.0
1.0
0.1
Average Number of Interactions per Crossing
6 Bunches
36 Bunches
108 Bunches
10^30
10^31
10^32
10^33
Luminosity

- Run 2A (2001-03) is supposed to yield $2\ fb^{-1}$ or $2000\ pb^{-1}$

- $N_{t\bar{t}} = 16{,}000 \Rightarrow 7{,}200$ in l+jets channel

In Run I, with 25% efficiency, we had ~ 77 events in l+jets channel.

$\therefore$ Run 2A $\Rightarrow$ 1800 l+jets candidates

Also > 200 $t\bar{t} \to e\mu$ as opposed to 4 events in Run 1

- Single top production has not been observed in Run 1.

In Run 2A $\gtrsim 300$ single top events may be seen after cuts

- Higgs ?

At $M_H = 115\ GeV/c^2$,

$\sigma_{WH}^* \cdot BR(WH \to l\nu b\bar{b}) \simeq \underline{54\ fb}$ $\Rightarrow$ 108 events in $2\ fb^{-1}$

$\Rightarrow \sim 10$ events after cuts with $S:B = 1:5$

$\frac{S}{\sqrt{B}} = 1.4 \leftarrow \sim 1.4\ \sigma$ significance

Time Structure of Accelerator Beams

Particles are accelerated by electric fields generated by an RF system. This requires particles to be bunched (packed into bunches). There is a time-structure for the beam.

FT experiments:

An experiment received beam only for a fraction of the total time; this is called the duty cycle of the machine. ← Measure of the efficiency of an accelerator

Tevatron FT: Duty cycle $\sim 20s/60s \simeq 33\%$

Spill time

40s for acceleration and extraction of the beam.

The data-acquisition (DAQ) system at Fixed Target experiments must be organized in such a way that the data are collected rapidly during the spill time. Much of the filtering, recording and monitoring can be done in between spills.

Time Structure at Colliders

In the colliders / storage rings, the two beams are filled, accelerated to nominal energy once and allowed to circulate and collide with each other for several hours ($\gtrsim$ 24 hours at the Tevatron).

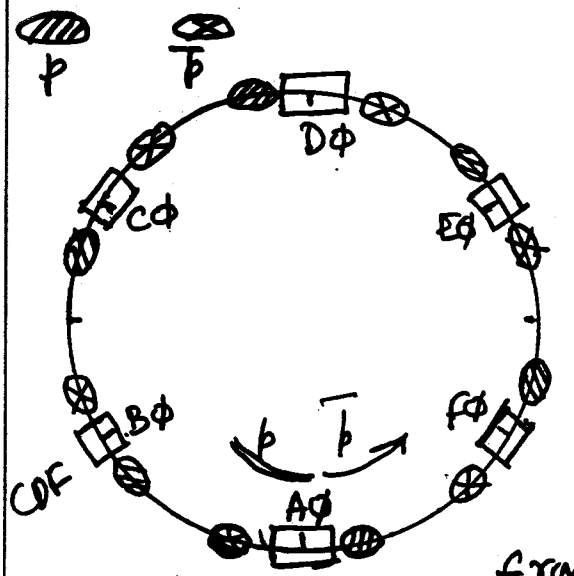

Many bunches in the ring

$6p \times 6\bar{p}$ provides 6 interaction or collision regions.

But, in unused interaction regions the beams are prevented from colliding (and wasting of beam) by separating the beams/bunches using electrostatic separators.

Run 1 ← 6x6 ⇒ 20 μs / 6 = 3.3 μs

In Run 2a, we have 36p × 36p̄ bunches

The bunch-spacing is dictated by the accumulator RF timing structure

~4 bunches in ~1.6 μs

⇒ ~396 ns ⇒ 400 ns

~~Actual~~ Quoted bunch-spacing 396 ns

The number of bunches will be tripled to have bunch-spacing ~ 132 ns (Less interactions / crossing)

DAQ Design Criteria and Goals :

- "Measure" signal adequately to permit reconstruction of events
  - Processing for each element must consider the resolution and dynamic range of the signals
- Minimize dead-time (preferably dead-timeless) and minimize loss of information (preferably no loss)
  - Provide adequate pipelining and buffering
- Provide proper calibration of all detector systems
- Provide adequate monitoring
  - temperatures, pressures, gas purity, ... etc
  - also detector performance (including trigger performance)
- Provide adequate diagnostics and alarms to detect component failure and timely repair
-

Basic components of a DAQ system

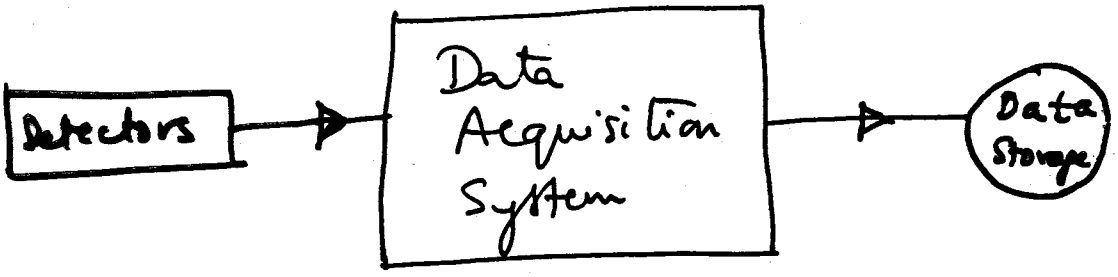

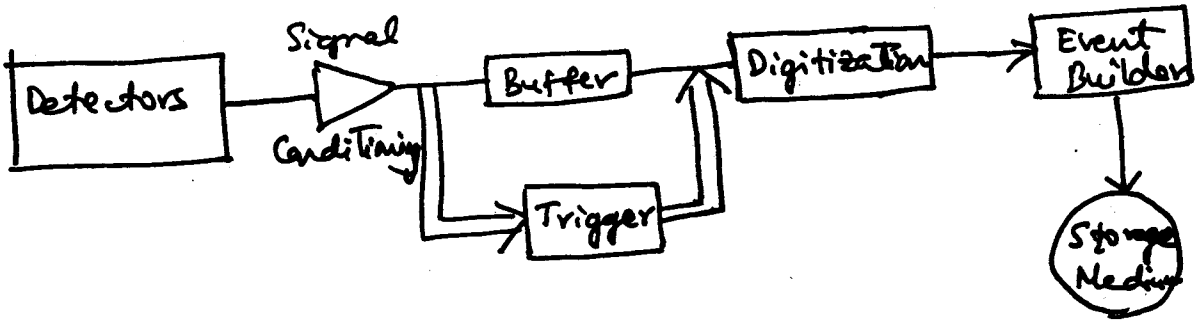

Data-Flow Scenario

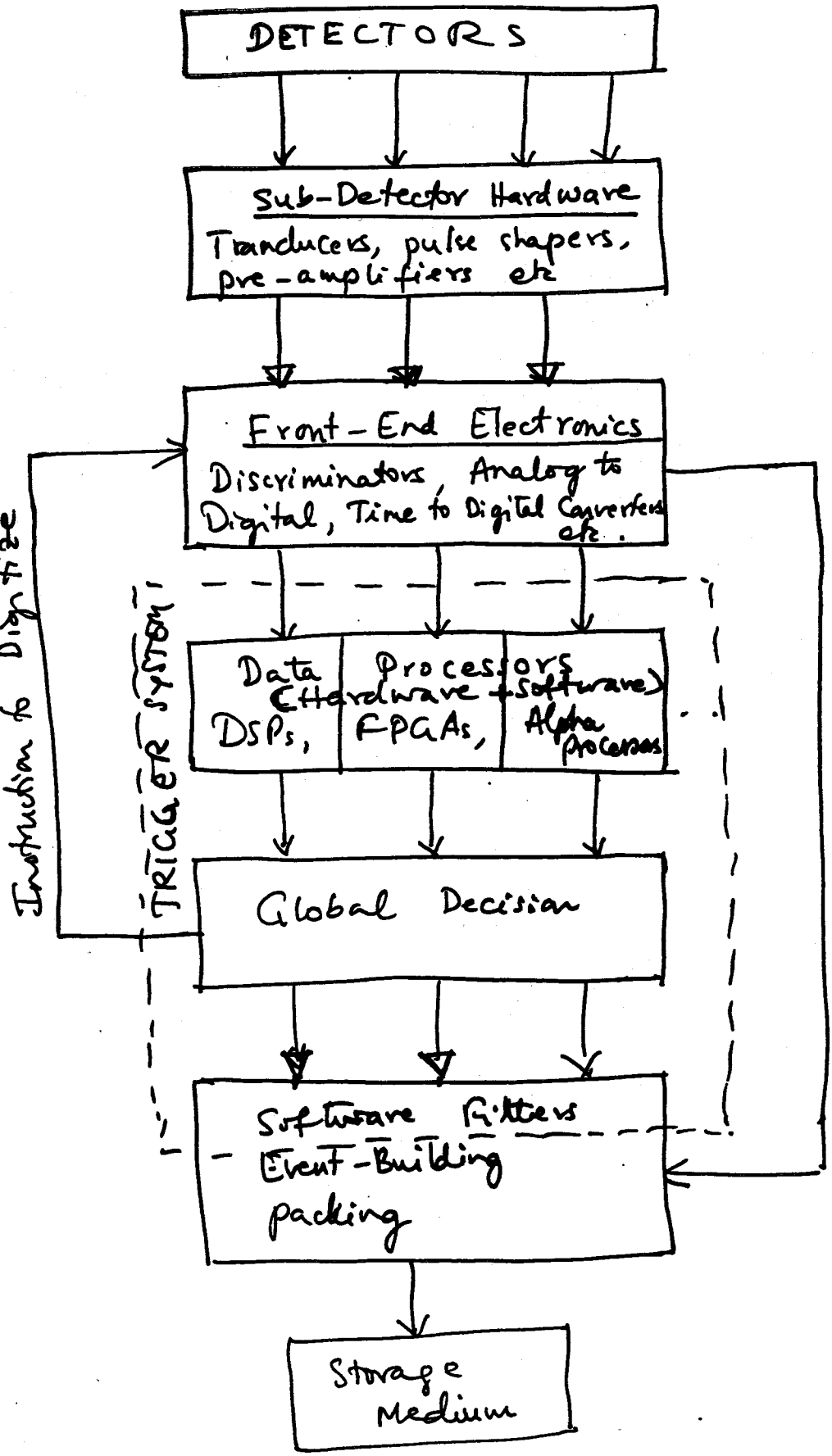

On-line Data Handling Tasks

Electronics Engineering → Computer Engineering

- Amplification of signals
- Pulse-shaping / Signal conditioning
- Digitization
  - Measurement of amplitudes of signals from calorimeters, $\frac{dE}{dx}$, ..
  - Measurement of drift times, time of flight ..
- Multiplexing
  - Sharing of electronics or data communication resources (or even computational resources)
  - to be designed as to avoid undesirable deadtime.
- Data Processing / Manipulation
  - Computing derived quantities from measurements
  - making logical decisions & data communication
- Data Sparsification or Compression
  - Read-out only channels with signals (zero-suppression)
  - Packing of data, data reduction
- Data Correction
  - Applying calibration, (offsets, scaling etc.)
- Data Recording

Triggering / On-line Data Selection

- The goal of a trigger system is to select interesting events with high efficiency for recording and suppress background events.
- Should have capability to handle very high rates
- Carried out by a large, complex array of sophisticated electronics circuits and computers that examine the information flowing in and decide whether an event is worthy of further consideration.
- Usually multi-level, hierarchical triggers. At each level, "go" or "no-go" decision is made to proceed to additional, more sophisticated processing of information at next level.
- A properly designed trigger system, will allow all (or most) of the interesting events (signals of rare events and new phenomena) to survive the highest level trigger and be permanently recorded for offline analysis.
- The number of events from input to output is reduced by several orders of magnitude.

Dataflow of CDF "Deadtimeless" Trigger and DAQ

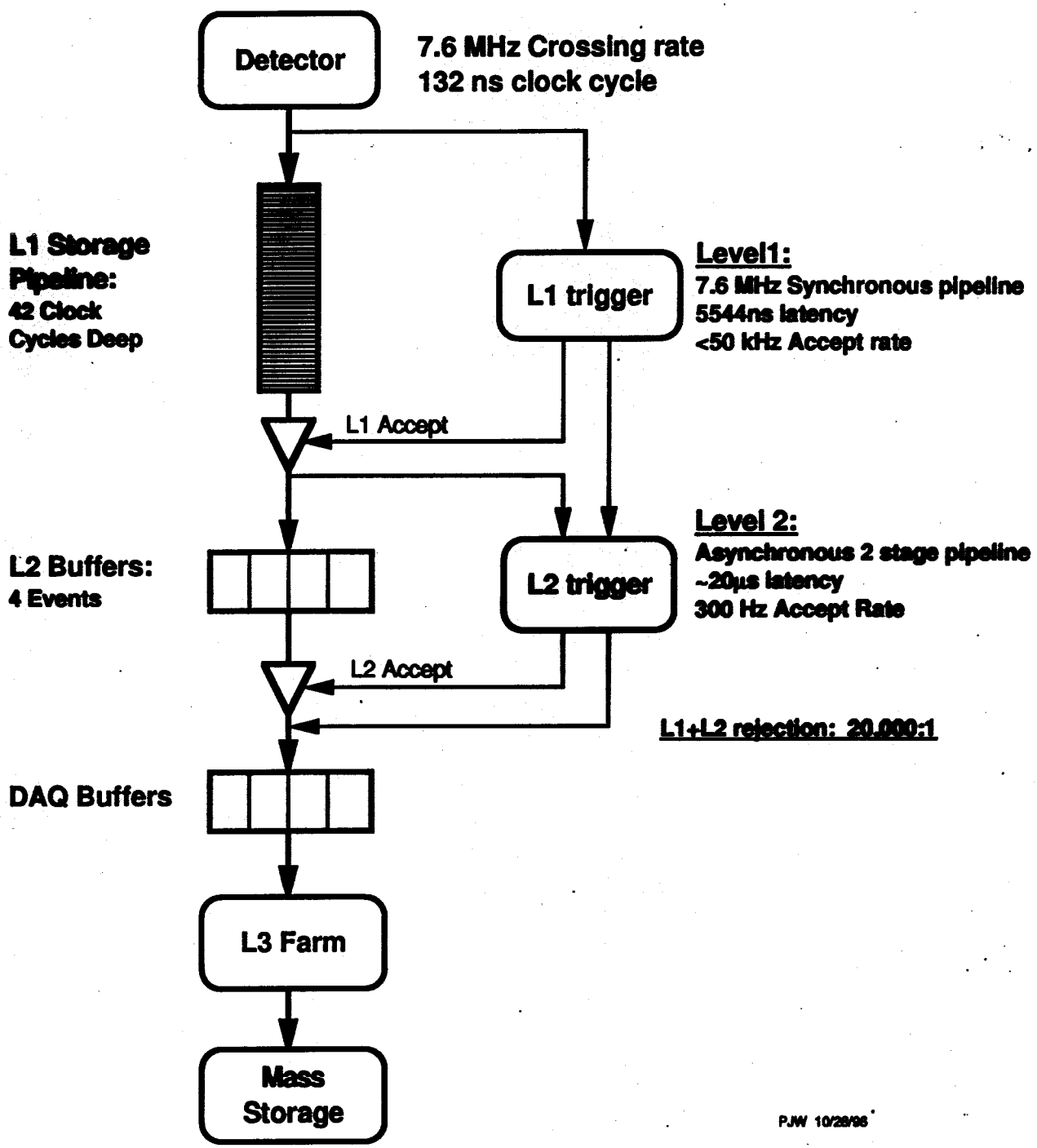

PJW 10/28/98

Real-Time Data Handling and Data Acquisition

- Once upon a time, data was recorded off-line!
  Data acquisition could wait for days, months or years!
  - Expose nuclear emulsions to particle beams
  - Take bubble chamber photographs of interactions

  → Then scan "off-line" and record data.

- In the not-so-distant past, we wrote data to storage media based on simple interaction criteria
  - Then we organized, reduced and analyzed data completely off-line.

- Today, not only do we need to record data on-line, but, data analysis has to start when a high energy event occurs.

  The electronic data from the detectors has to be transformed into useful "physics" information in real-time, reduce the data volume by several orders of magnitude and record interesting events for offline analysis

Trigger Architecture

Collision Rate:
2.5 MHz @ 396 ns bunch-spacing
7.5 MHz @ 132 ns

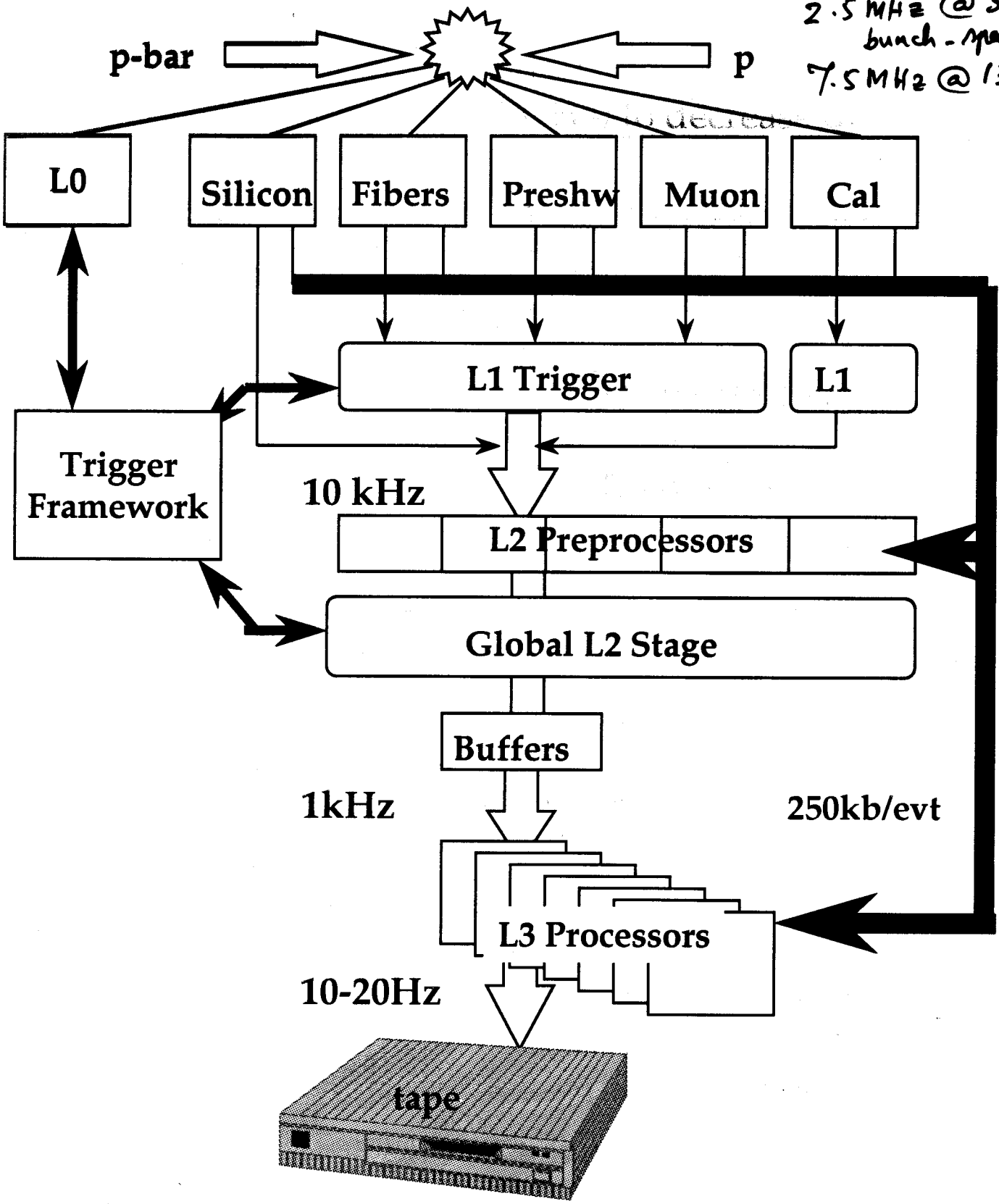

L1/L2 Trigger Elements

- **Trigger: reduce inelastic trig rate by 10^6**
- **Maintain Run I eff., accept. for high p_t e,μ,jet**

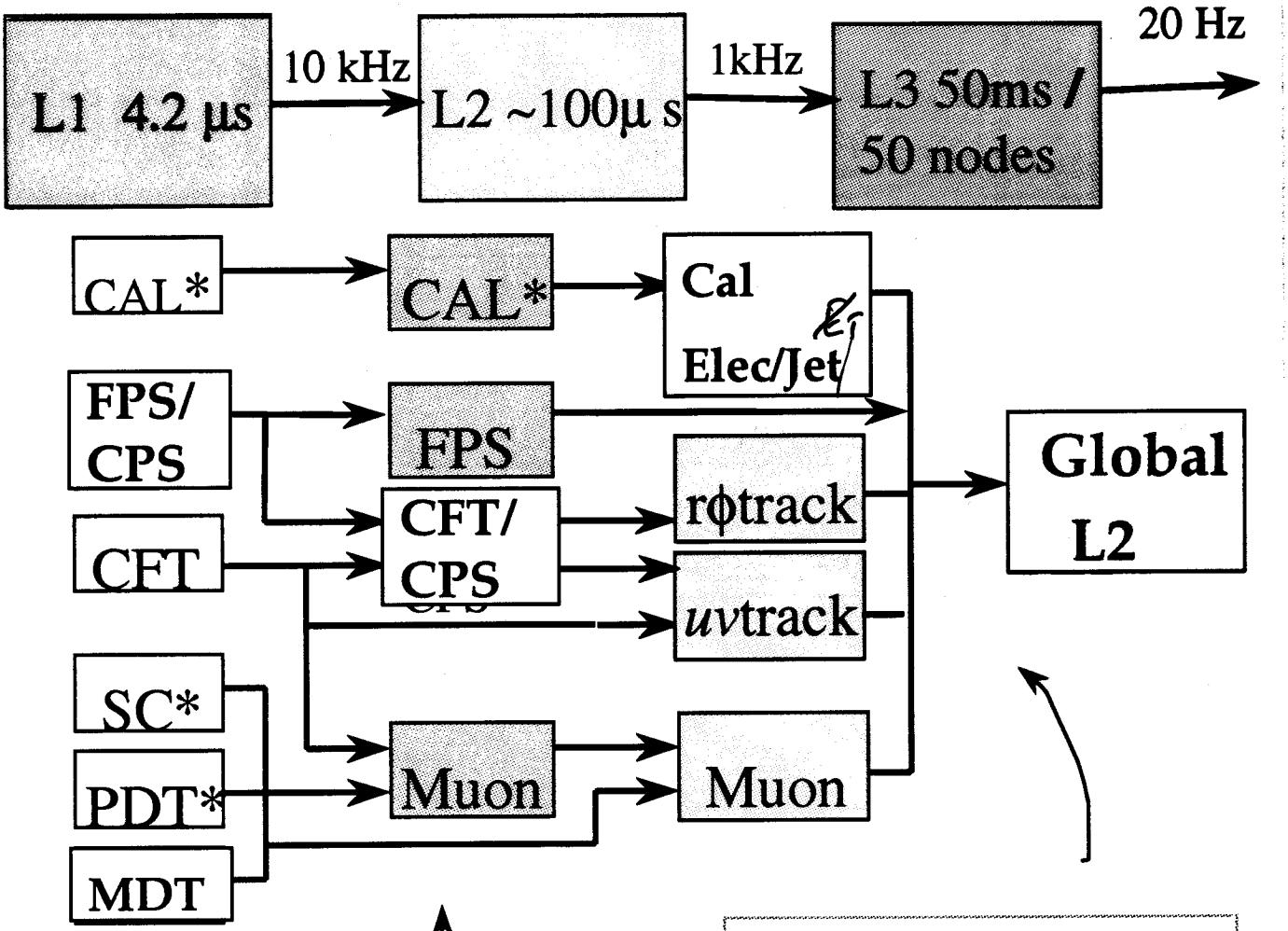

Combines L1 Objects into electrons, muons jets, ...

Looks for E_T, tracks consistent with electrons muons, jets

* Retained from Run I

DØ Level 2 Trigger Block Diagram

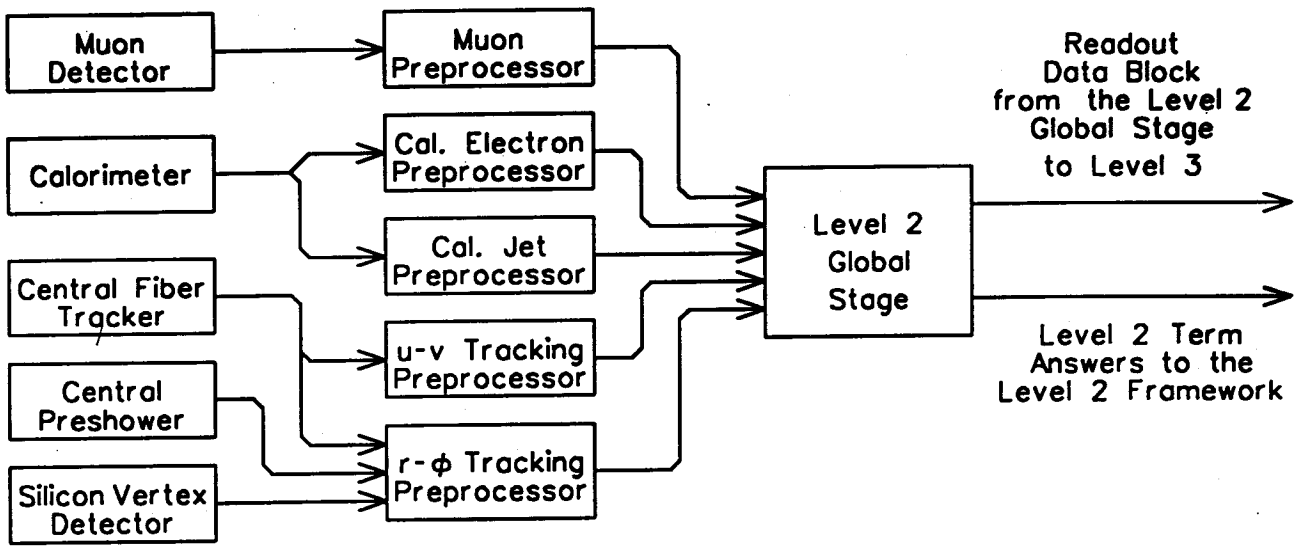

L3 Farm

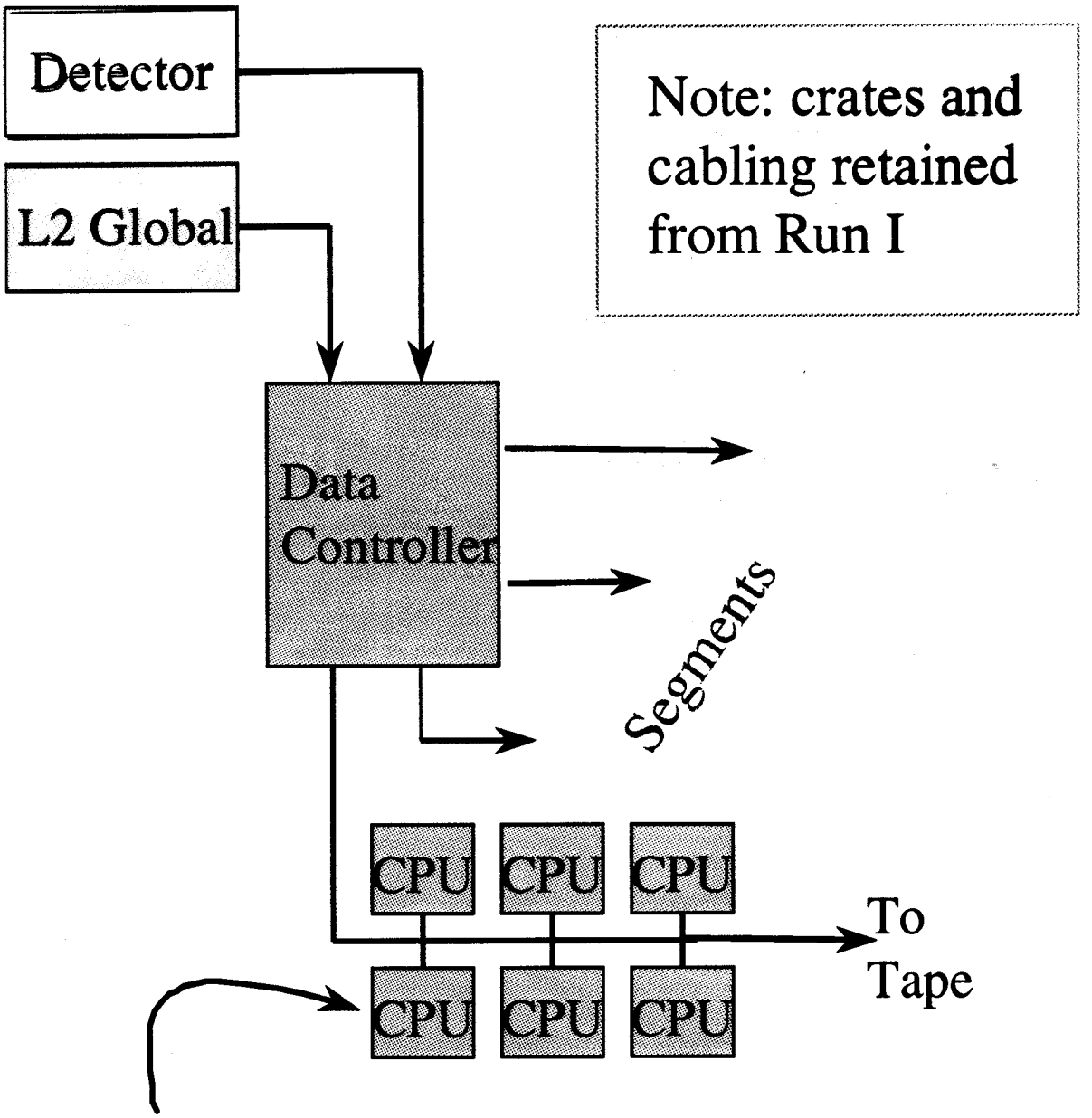

Note: crates and cabling retained from Run I

Event Reconstruction: Electrons, Jets , Muons, Topology...

Trigger

Three levels:

L1 (5.5 μs, 45 KHz acc)

COT tracks

Muon+track

Cal single-tower, sums

L2 (20 μs, 0.3KHz accept)

Custom Alpha boards

Jets, comb objects, 2nd vert.

L3 (50Hz accepts)

Like offline

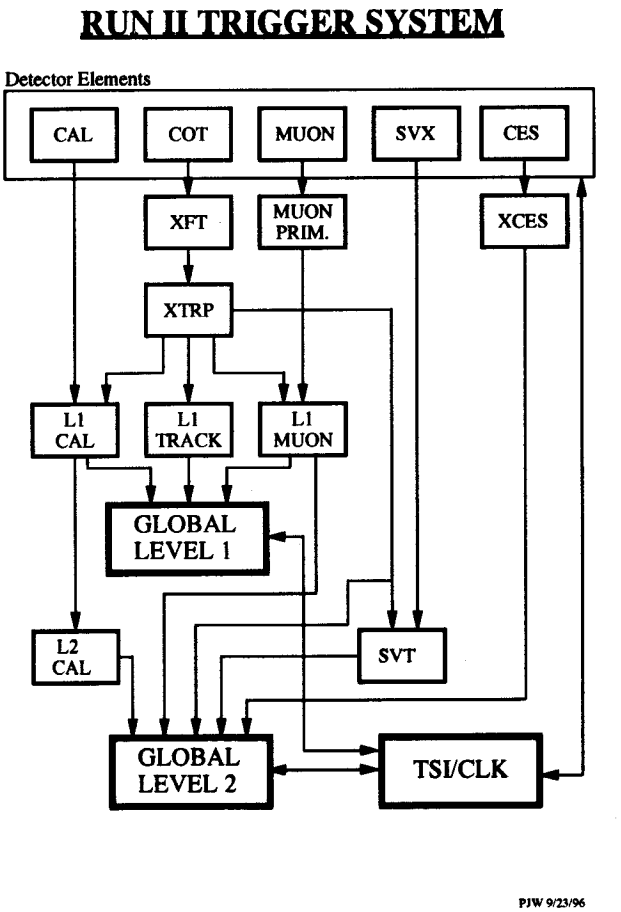

- L1 cal 4/5 protyped, being tested together
- L1 track 3/5 protyped, XFT boards tested
- L1 muon 1/2 prototyped
- Trigger supervisor 2/2 protyped
- L2 cal protyped, being tested together
- SVT 4/6 protyped, tested
- L2 alpha board prototype exists
- L3 protyped as Linux farms

Global Level 1 Crate

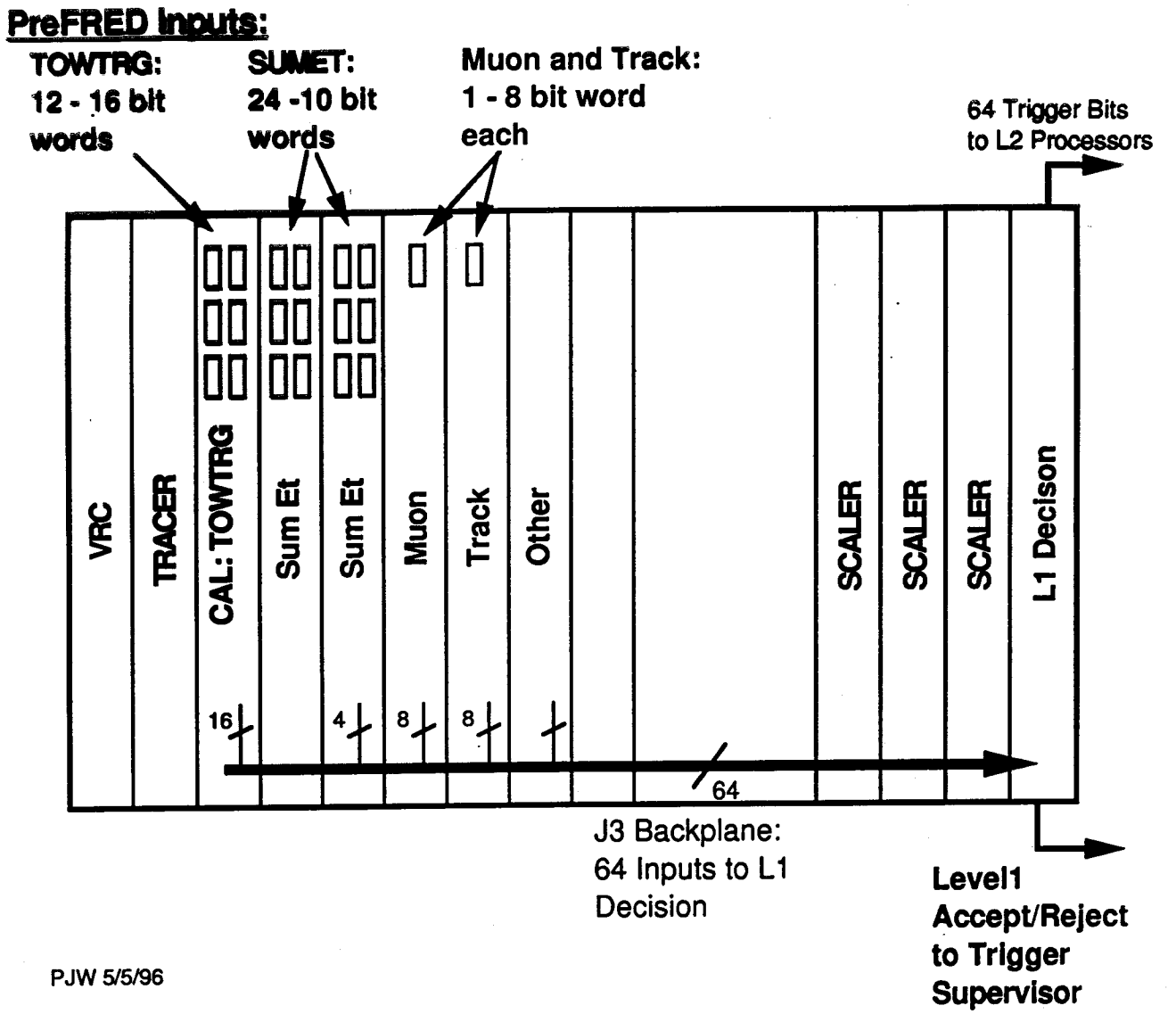

PJW 5/5/96

Triggers can be set on any measured or computed quantity.

Trigger on:

- event vertex
- inelastic interactions
- secondary vertices
- heavy ionization
- charged particle multiplicity
- various particle types (presence of)
  - electrons, muons, taus, jets, ν ($\not{E}_T$)
- momenta of particles
  - high p_T leptons
- large missing energy
- Combination of the above
- any derived / computed quantity in the trigger system (say invariant mass)

Trigger	L1 (Hz)	L2 (Hz)	L3 (Hz)
Capability	5–10k	1000	20
High p_T electrons (e,2e,e+$\not{E}_T$)	440	100	2
High p_T muons ($\mu, 2\mu$)	330	160	3
Central Di–muon	230	100	3
Central Di–electron	400	25	2
$t\bar{t} \rightarrow e\mu$	60	15	1
High p_T jet	80	40	1
High p_T photon	30	10	1
High missing E_T	140	140	1
Total trigger rate	1710	590	14

Table 1: Approximate Run II trigger capabilities and accept rates for high p_T physics.

On-line Computing System

Responsible for tasks such as configuration, calibration, monitoring, diagnostics for DAQ and front-end and trigger electronics.

Run-Control is an important sub-system

- Primary user-interface to the DAQ system
  - starting and stopping runs, viewing the system
- Initialization of all front-end and trigger hardware
- Configuration of the DAQ system
- Automatic start-up of event monitor tasks
  - Examines
- Procedures to perform calibration
- Monitoring of system performance
- Reporting of errors and recovery action if feasible.
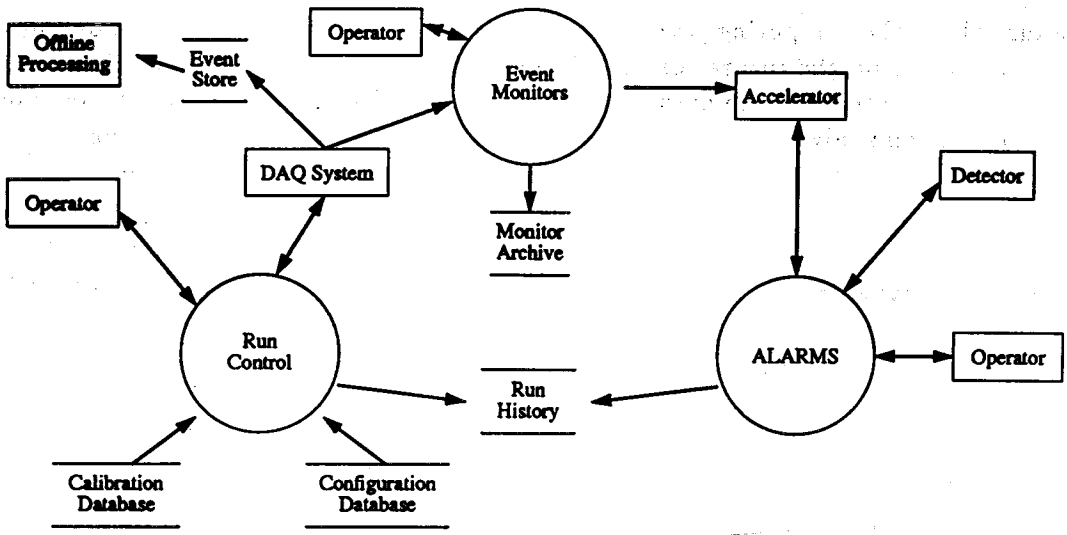
A logical model of the CDF On-line Computing System